FTC-049 Flat Test Cell 100 cm2
for PDMS flat sheet membrane 20x5

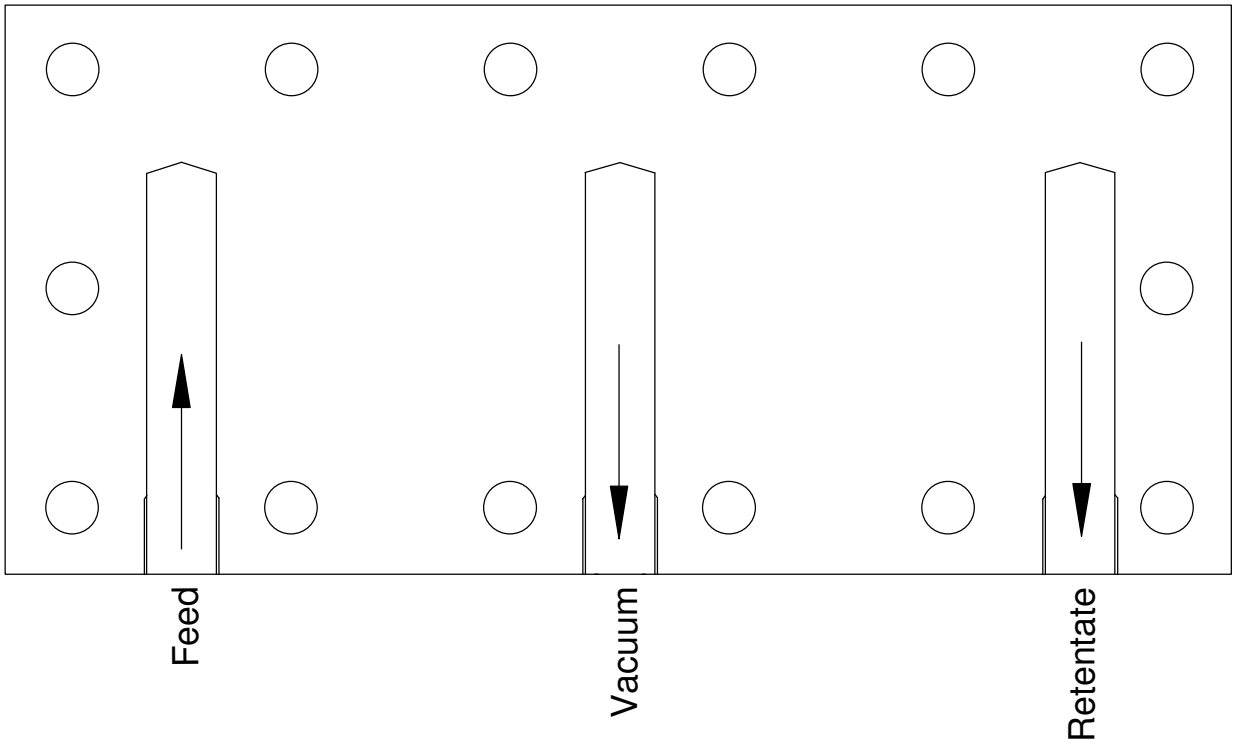

Enclosure: 14 x M12 bolts

Connections: Swagelok 3/8" NPT Union to tubing

Dimensions:
Plates 280 x 130 mm, thickness 30 mm each plate
Membrane sheet: 210 x 68 mm
Effective filter area: 96 cm2

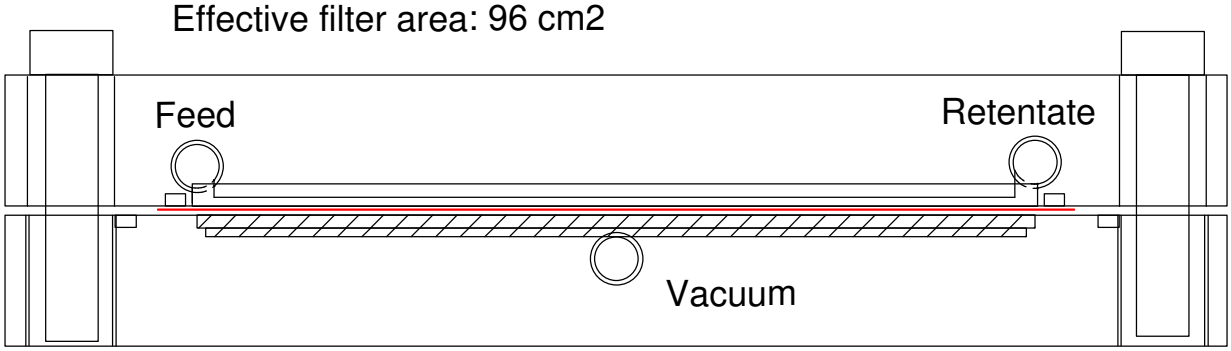

REV.	DRAWN	DATE	DESCRIPTION
–	–	–	–
–	–	–	–
–	–	–	–
–	–	–	–
–	–	–	–

PROJECT: FTC-049 Flat Test Cell for PDMS membrane	ORDERNUMBER: –	DRAWN: FM Velterop
DRAWINGNAME: Documentation Drawing	DRAWINGNUMBER:	DATE: 23-12-2009
	FILENAME: Doc Drawing	SCALE: – / SIZE: A4

Ruwheid volgens NEN 3634 | Maattoleranties volgens NEN 2365

Vorm- en plaatstoleranties volgens NEN 3311